California Polytechnic State University Pomona
DEPARTMENT OF ELECTRICAL & COMPUTER ENGINEERING

Digital Logic Design Laboratory

ECE 2300L
Experiments 1 & 2

Verifying the Truth Table for BASIC GATES

Prepared by
Kevyn Santos & Yanming Feng

Presented to
Dr. Yazdy R. Mostafa

September 14 , 2023

Introduction:

In this lab, our objective centered around constructing, assessing, and testing circuits employing AND, OR, and NOT logic gates. We diligently compared the performance of these circuits with the information provided in their respective online datasheets.

Prelab:

74LS04 (NOT gate):

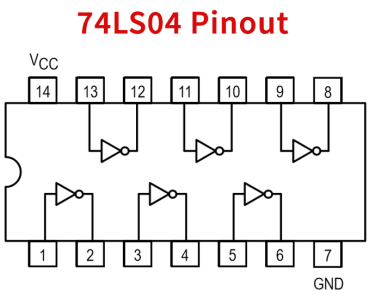

Pin lay out of NOT gate

Input	Output
X	Z
0	1
1	0

Truth table of NOT gate

74LS08 (AND gate):

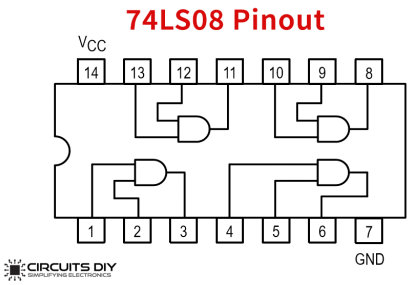

Pin lay out of AND gate

Inputs		Outputs
X	Y	Z
0	0	0
0	1	0
1	0	0
1	1	1

Truth table of AND gate

74LS32 (OR gate):

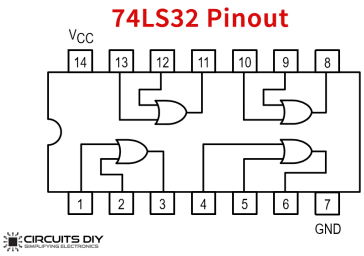

Pin lay out of OR gate

Inputs		Outputs
X	Y	Z
0	0	0
0	1	1
1	0	1
1	1	1

Truth table of OR gate

Procedure:

74LS04 (NOT gate):

Fig. 1A shows LED 1 on and LED 2 off

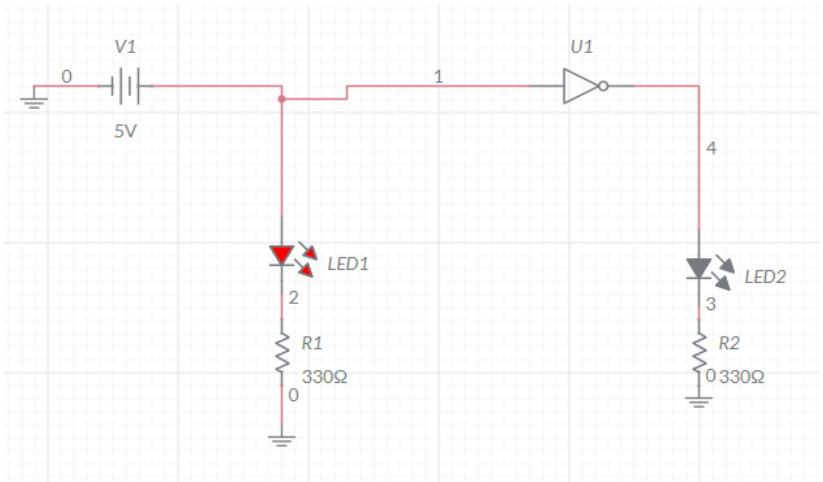

Fig. 1A diagram

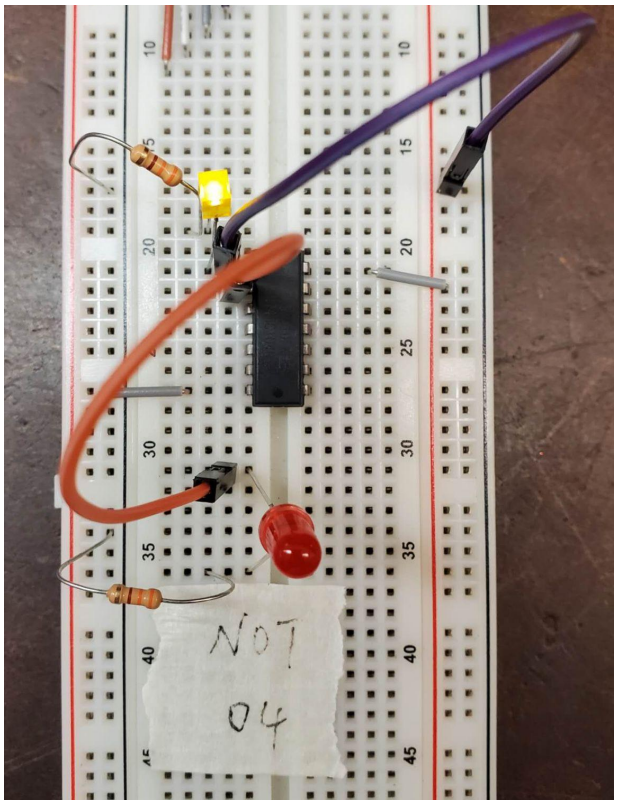

Fig. 1A

Fig. 1B shows LED 1 off and LED 2 on

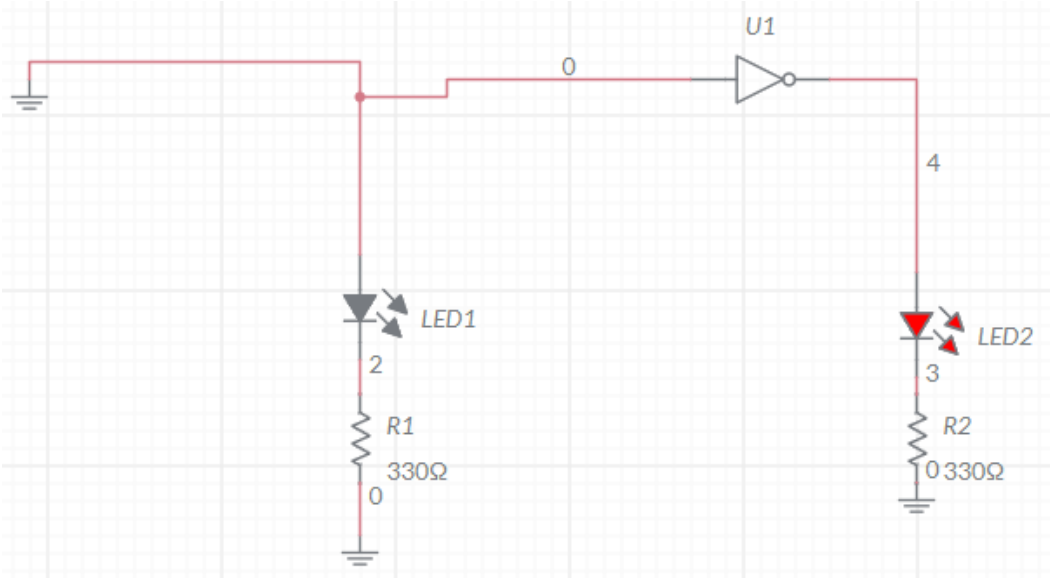

Fig. 1B diagram

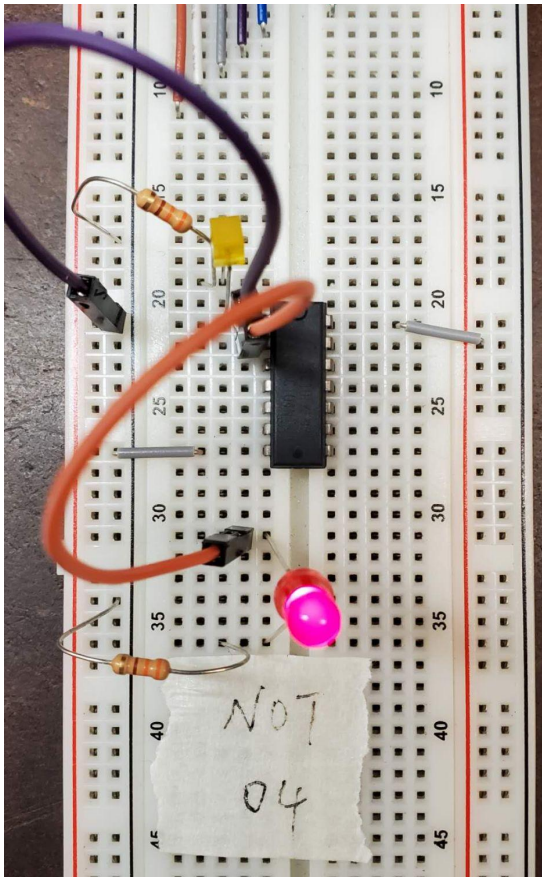

Fig. 1B

74LS08 (AND gate):

Fig. 2A shows LED 1 (Yellow) and LED 2 (Yellow) on which means LED 3 (Red) is on.

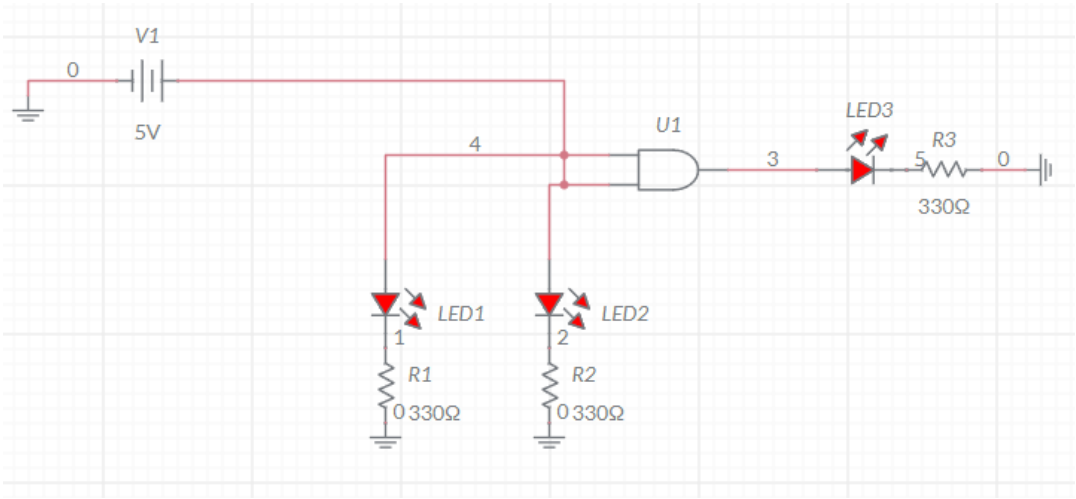

Fig. 2A diagram

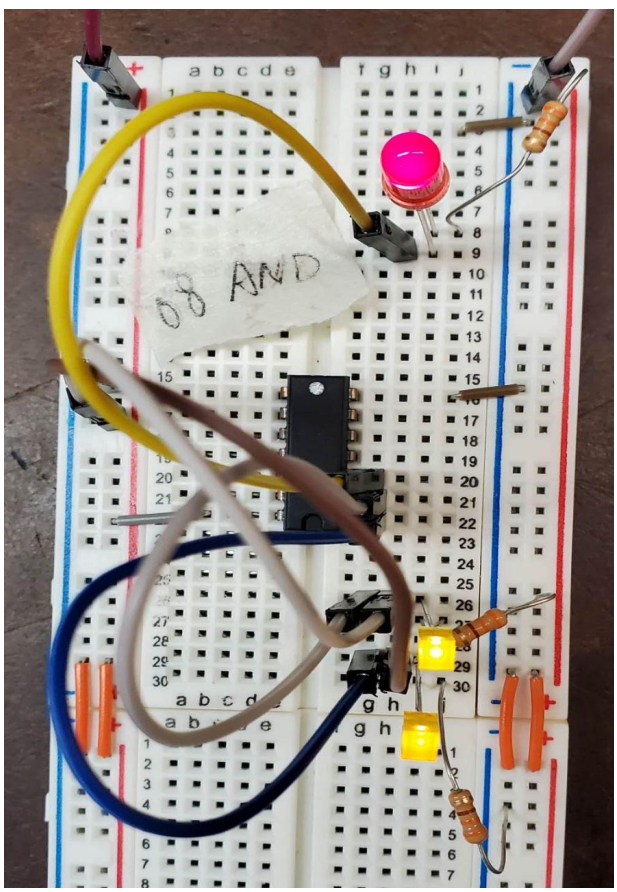

Fig. 2A

Fig. 2B shows LED 1 (Yellow) on and LED 2 (Yellow) off which means LED 3 (Red) is off.

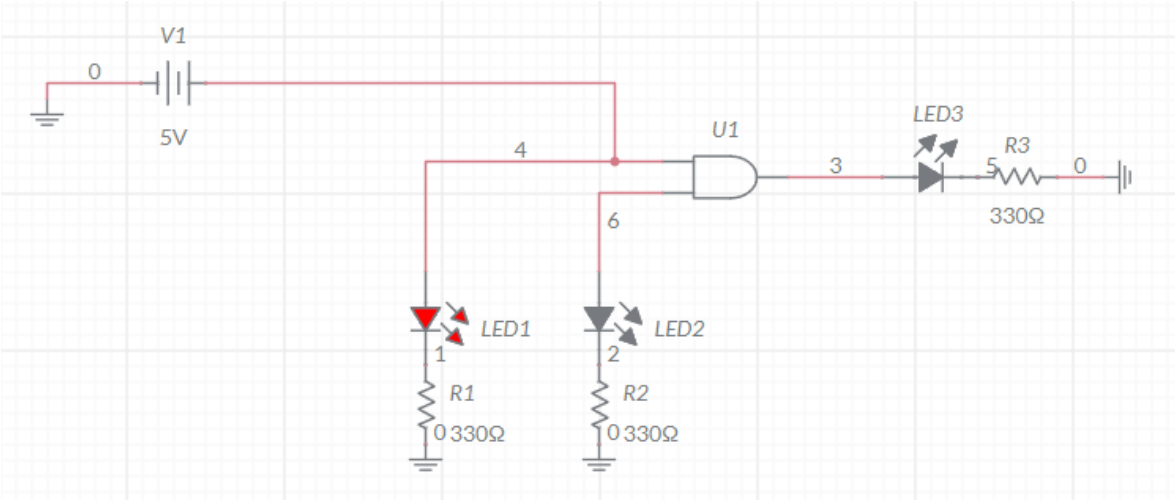

Fig. 2B diagram

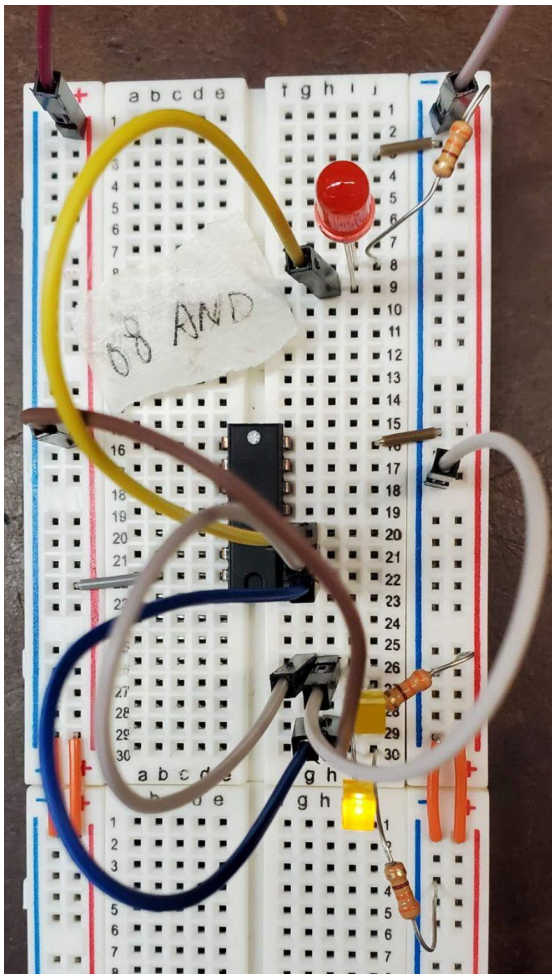

Fig. 2B

Fig. 2C shows LED 1 (Yellow) off and LED 2 (Yellow) on which means LED 3 (Red) is off.

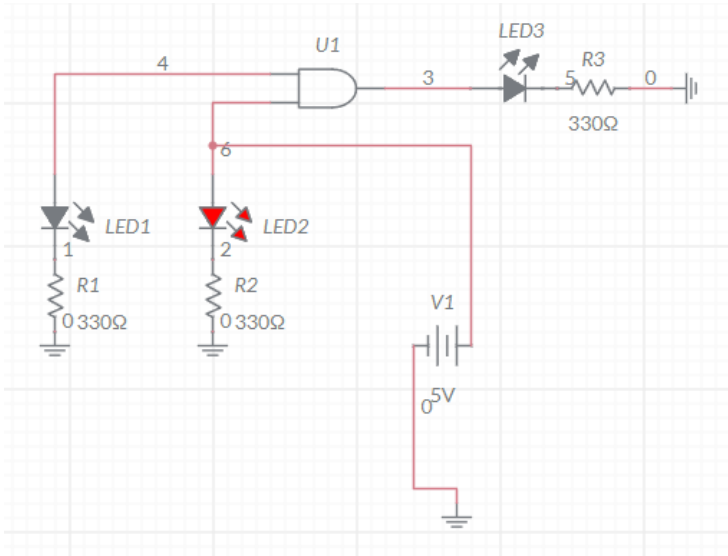

Fig. 2C diagram

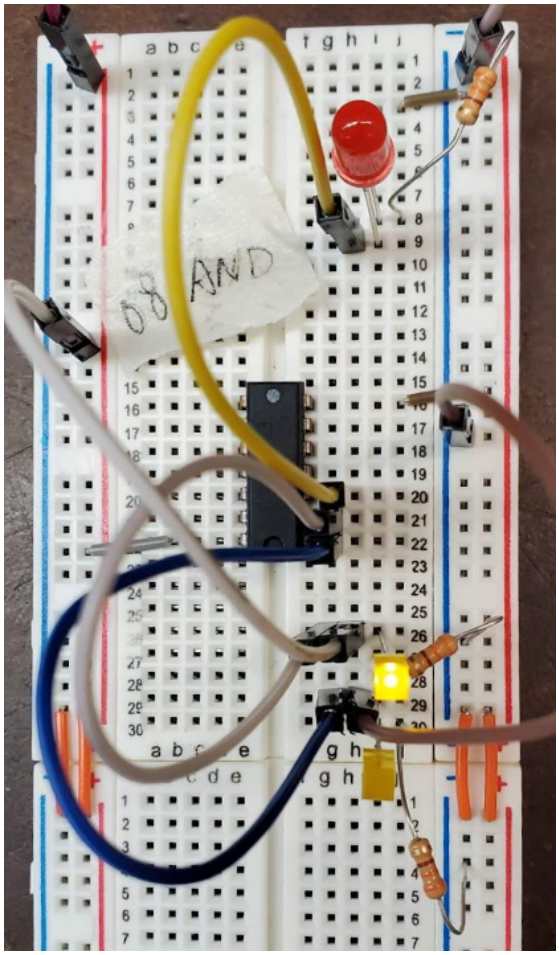

Fig. 2C

Fig. 2D shows LED 1 (Yellow) off and LED 2 (Yellow) off which means LED 3 (Red) is off.

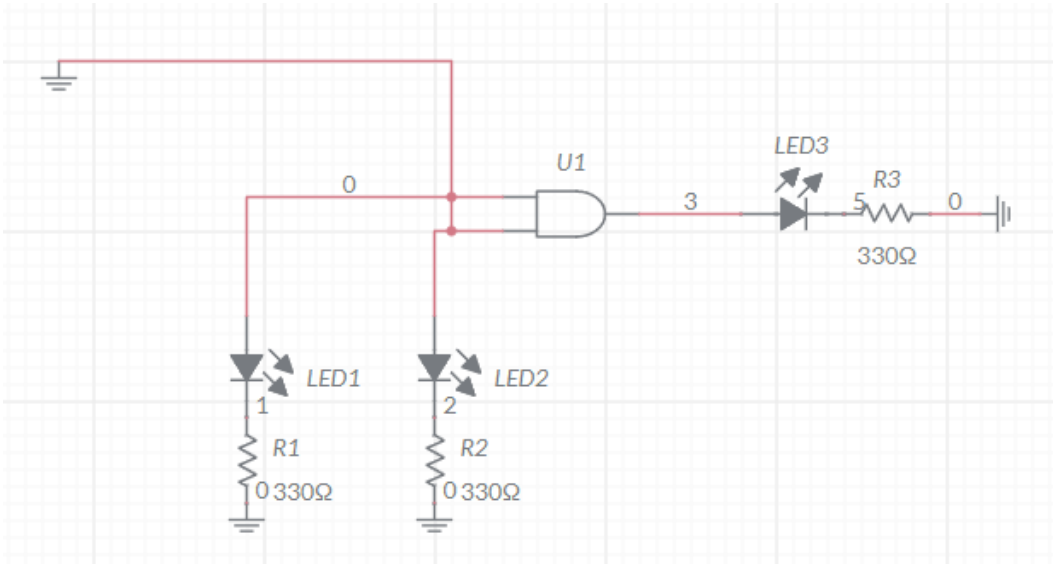

Fig. 2D diagram

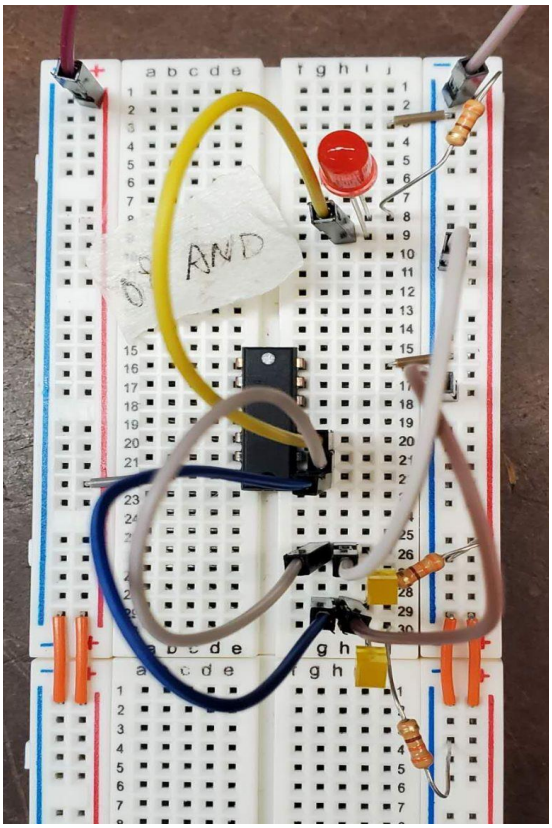

Fig. 2D

74LS32 (OR gate):

Fig. 3A shows LED 1 (Yellow) on and LED 2 (Yellow) on which means LED 3 (Red) is on.

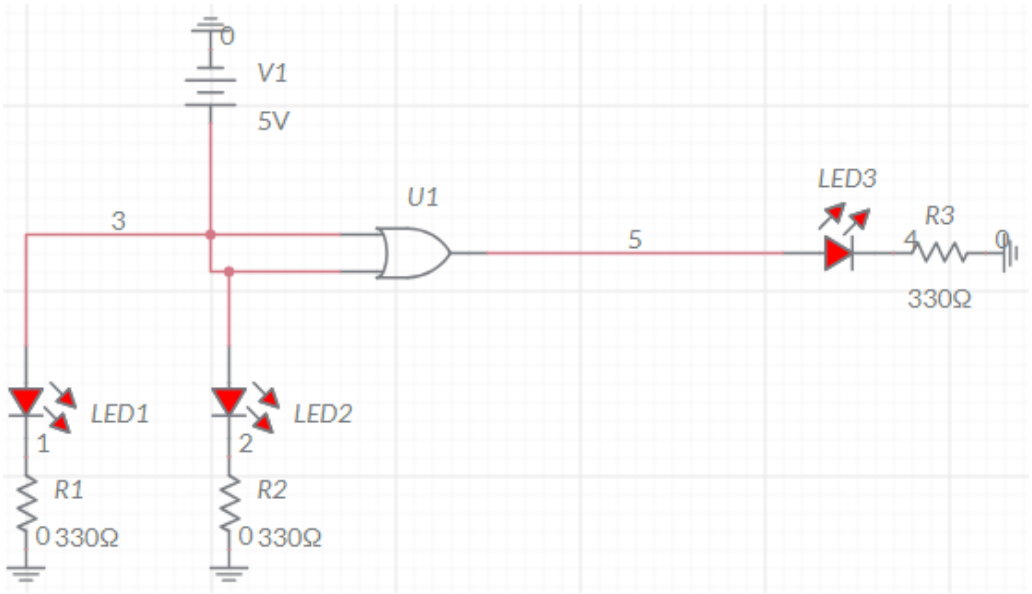

Fig. 3A diagram

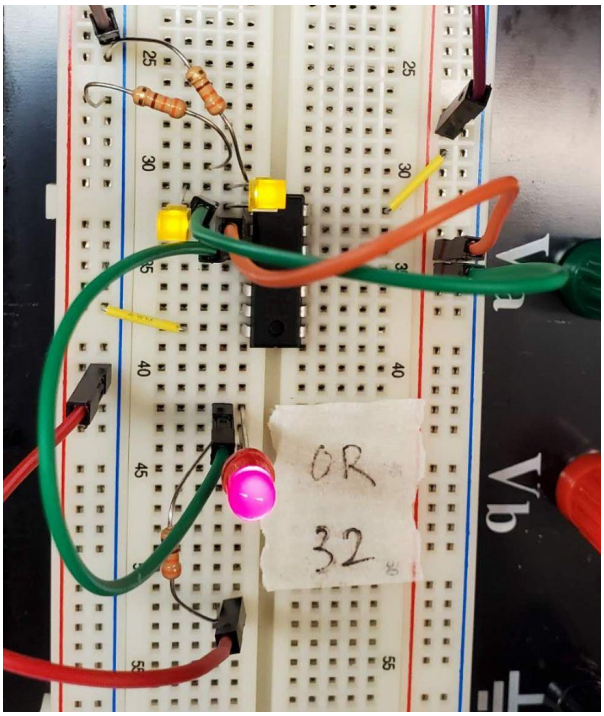

Fig. 3A

Fig. 3B shows LED 1 (Yellow) on and LED 2 (Yellow) off which means LED 3 (Red) is on.

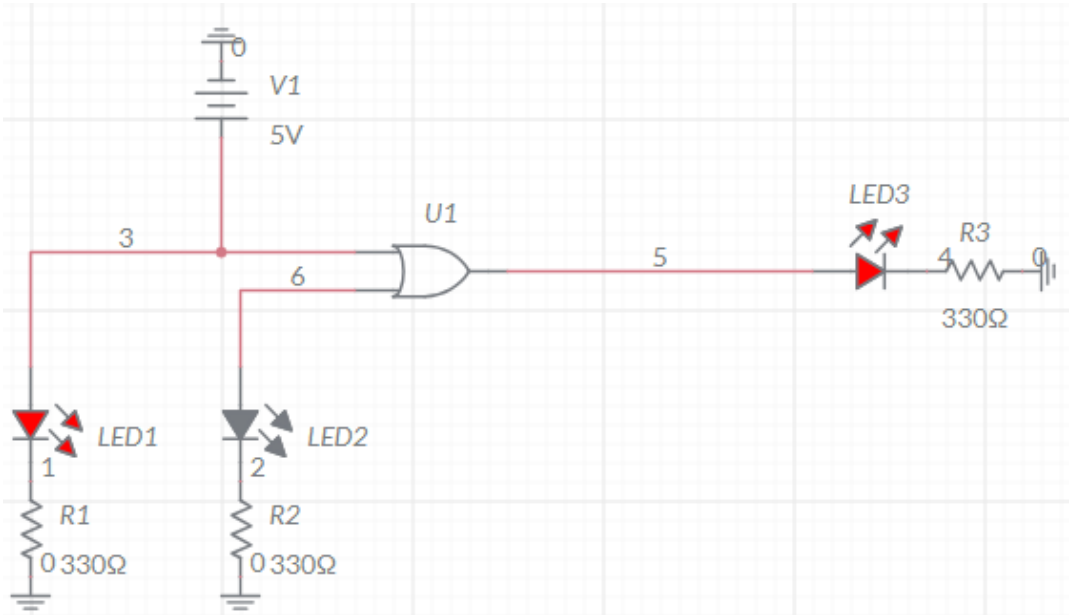

Fig. 3B

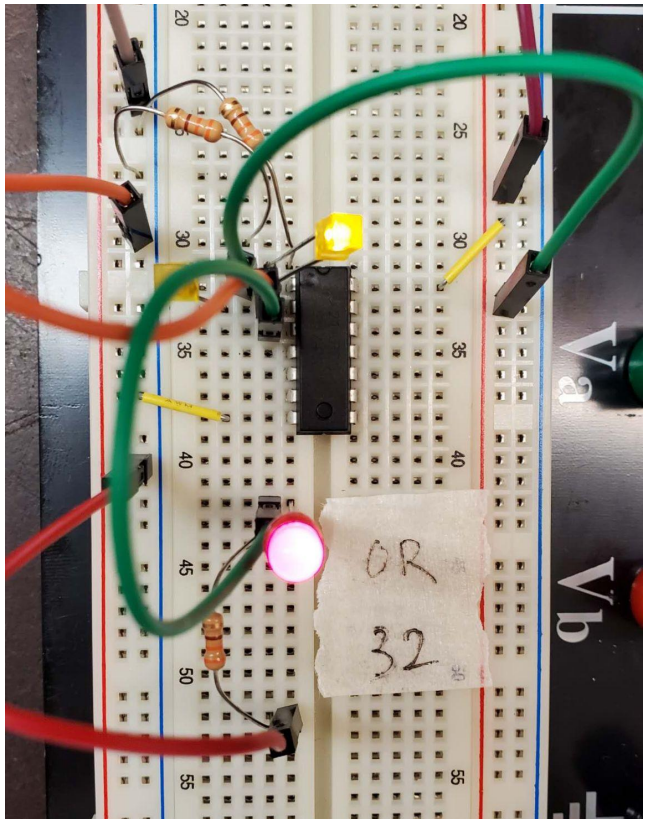

Fig. 3B

Fig. 3C shows LED 1 (Yellow) off and LED 2 (Yellow) on which means LED 3 (Red) is on.

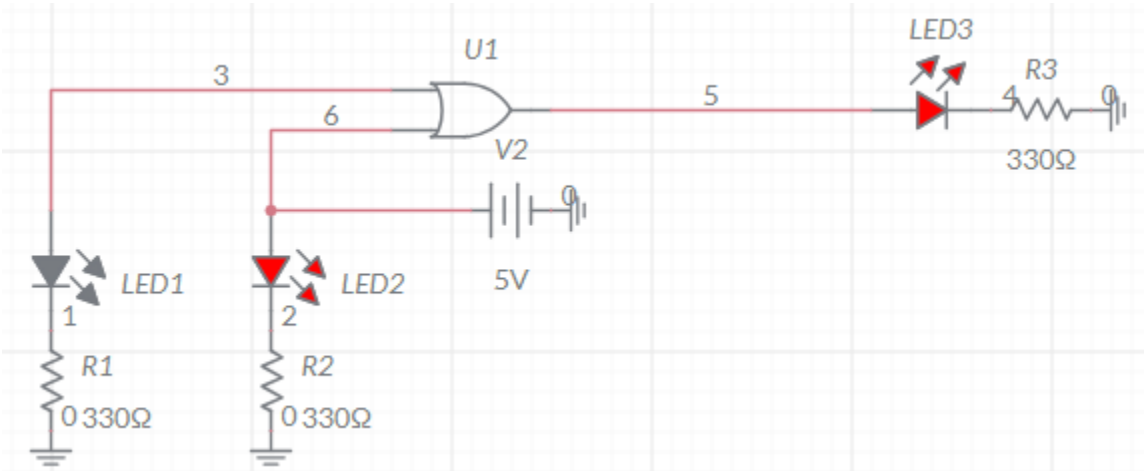

Fig. 3C diagram

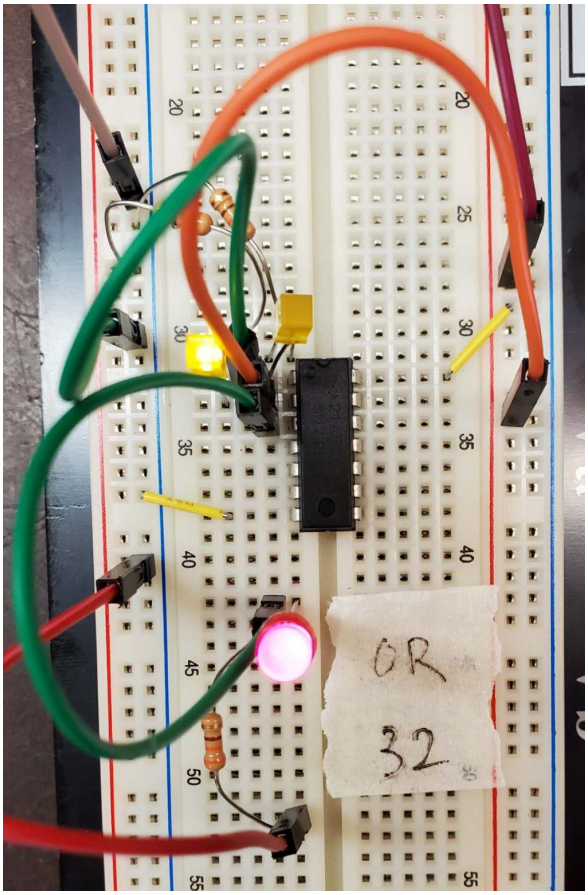

Fig. 3C

Fig. 3D shows LED 1 (Yellow) off and LED 2 (Yellow) off which means LED 3 (Red) is off.

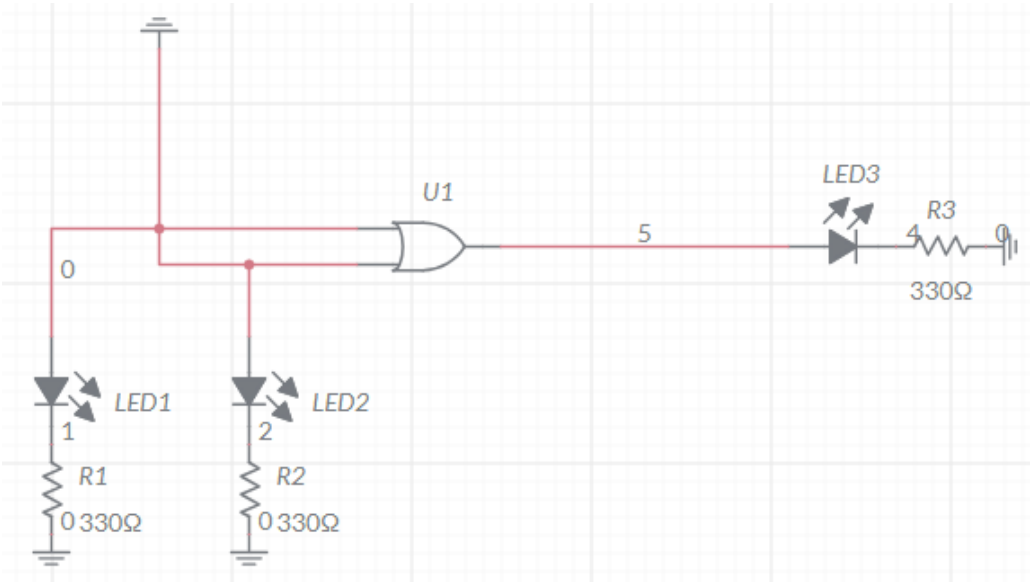

Fig. 3D diagram

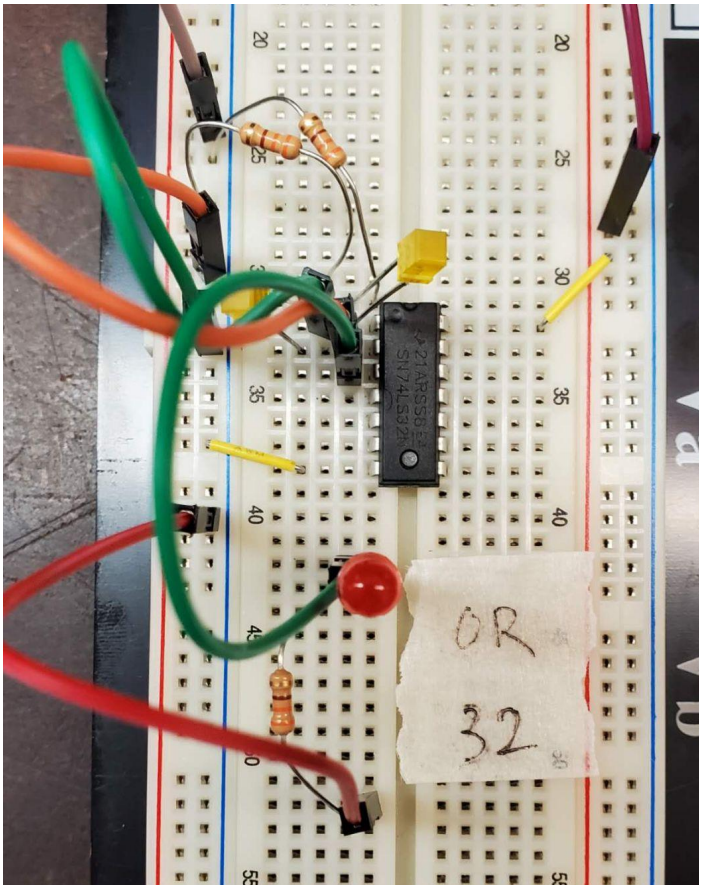

Fig. 3D

Post-Lab:

NOT Gate:

- Q = NOT A or A

A	Q
0	1
1	0

AND Gate:

- Q = A.B

A	B	Q
0	0	0
0	1	0
1	0	0
1	1	1

OR Gate:

- Q = A+B

A	B	Q
0	0	0
0	1	1
1	0	1
1	1	1

Conclusion:

During this lab session, all our circuits operated on a 5-volt power supply. Initially, we conducted tests on the NOT gate, meticulously verifying its conformity with the datasheet. It was observed that when the input LED was illuminated, the output LED remained extinguished, and conversely, when the input LED was off, the output LED lit up. Subsequently, we moved on to assess the AND gate, confirming with the datasheet. The output LED would only light up when both input LEDs were concurrently activated; any other input combination failed to trigger the output LED. Finally, our experimentation extended to the OR gate, where we once again validated its compliance with the datasheet. Here, we found that the output LED remained unlit only when both input LEDs were deactivated; any alternative input configuration consistently resulted in the activation of the output LED. In essence, this lab equipped us with the skills to effectively employ and analyze circuits featuring NOT, AND, and OR logic gates.